SUNSTONE GAS GRILLS LIQUID PROPANE TO NATURAL GAS CONVERSION INSTRUCTION

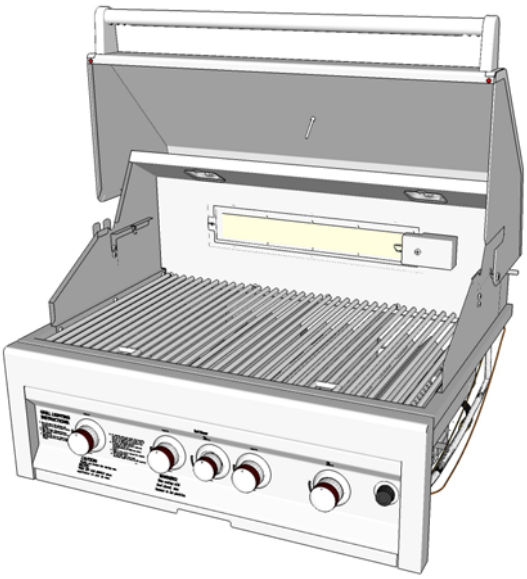

Understanding Gas Appliance Conversions

Making changes to an appliance so that it can utilize a different fuel is known as appliance conversion. The inner Valves and Orifices are designed to work with a particular gas that has a specific pressure. Natural gas is a much lower pressure gas than propane and converting the appliance to one or the other gases requires that the differing pressure is compensated for. In other words, connecting a natural gas appliance to a propane piping system will result in appliance malfunction and possibly danger. The reason for this is because natural gas orifices are larger than propane orifices strictly because of gas service pressure. In this case, the higher pressure gas flowing through a larger orifice will result in more gas through the burner and likely, more flame...an unnecessarily large flame. Conversely, trying to use a propane appliance with natural gas will likely result in a very small flame or no burner flame at all because of the lower pressure gas and the smaller orifice. This is the underlying purpose of an appliance conversion from propane to natural gas or from natural gas to propane.

To installer or person assembling grill: Leave this manual with grill for future reference.

To consumer: Keep this manual for future reference.

Conversions Between Natural Gas and Propane

The following illustrated conversion can be used for when converting either from Liquid Propane to Natural Gas. This example is shown with the Barkman 4 Burner with Infra Red Burner. Other Grills without a IR Burner, can also follow this instructions, the only diffearance is you are not required to change any "Safety Valve" or "IR Orifice". For converting gas types, it is extremly important to follow these instructions step by step, we always reccomend a Licenced Plumber or Installer perform any maintence or gas conversion on your grill.

This Gas Conversion requires the following Parts

(NG) Safety Valve

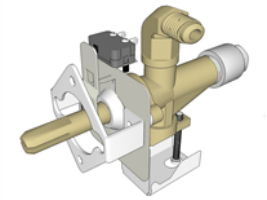

#50 Size Drill Bit

1/2" Flare Adapter

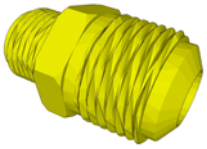

Natural Gas Regulator

This Gas Conversion requires the following tools (Not Provided)

Phillips Head Screw Driver

Adjustable Wrench

Hand Drill

Island Safety Vent Installation for either Liquid Propane or Natural Gas

For Natural Gas

Natural Gas (NG) is Lighter and will raise to upper end of structure upon leak. Outdoor Kitchen Islands housing Natural Gas Appliance must have several vents located at the approximate level as the Appliance Control Panel, were Knobs are located.

For Propane Gas

Liquid Propane Gas (LP) is Heavier and will lower to base of structure upon leak. Outdoor Kitchen Islands housing Propane Gas Appliance must have several vents located within 4" to 6" from ground level.

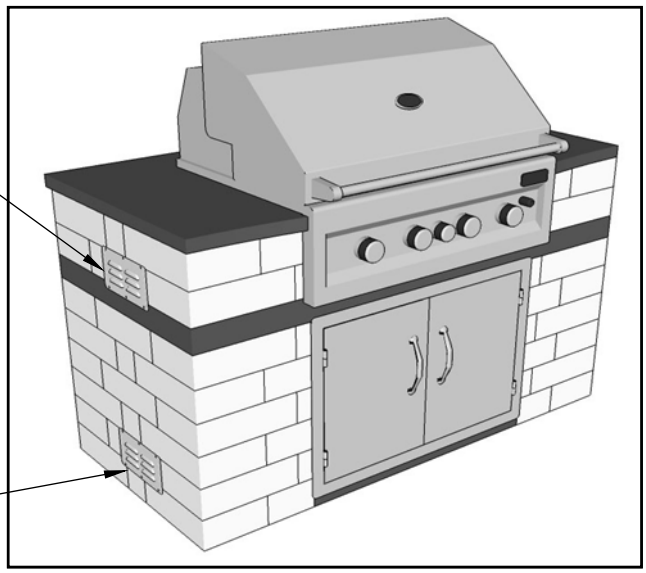

IMPORTANT!! - USE CORRECT GAS REGULATOR FOR EACH GAS TYPE

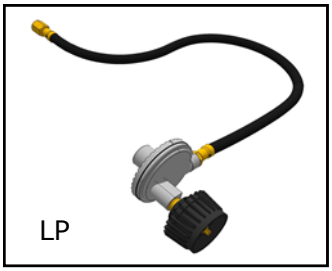

For Liquid Propane

Your new Grill is set as Liquid Propane (LP), which uses the Medium Pressure Regulator supplied your your gas grill appliance, designed for portable tanks.

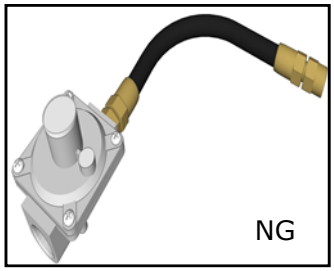

For Natural Gas

When converting your grill to Natural Gas, be sure to remove the LP Regulator, and install this NG Regulator in it's place, reccomend to have licenced plumber make final gas connections.

Conversions Between Natural Gas and Propane

Before proceeding, make sure you have cleared away from grilling area any loose debris and secure a small box to place each screw in as you remove them. Locate a chair that has arm supports or other platform, and place this in front of grill giving you an elevated position to set the grills control panel after removal, this way you do not need to remove any wires, or other hoses. In step "4", there are two pins that are holding the control panel in place, you will need to wiggle the control panel for it to drop down, sometimes angling it then pulling down will also release it were the valves are inserted in burners.

IMPORTANT!!! - BEFORE BEGINGING CONVERSION, GAS MUST BE TURNED OFF

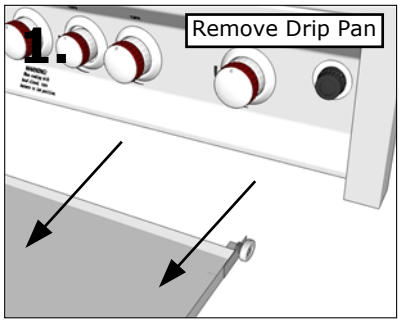

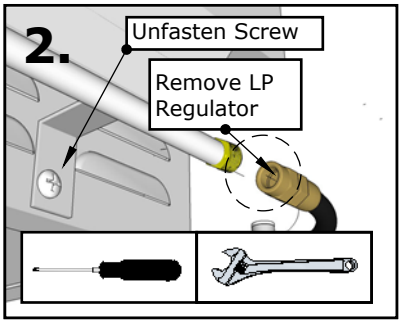

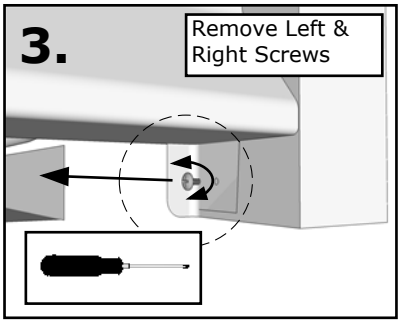

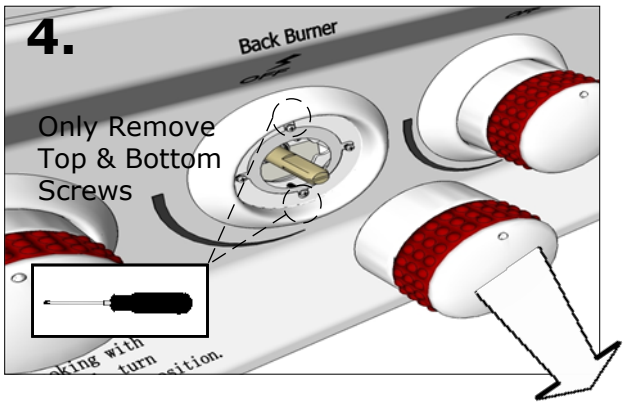

4. Remove the Small Center Knob

After removing the center small knob, the same one for the back Infra-red Burner, also remove ONLY the Top and Bottom Screws. This will release valve from control panel, but still keep it afixed to the gas manifold pipe.

5. Slide out Control Panel

Grip base of control panel firmly, and first pull down and out releasing the two pins inserted into grill control panel frame. (See illustration below)

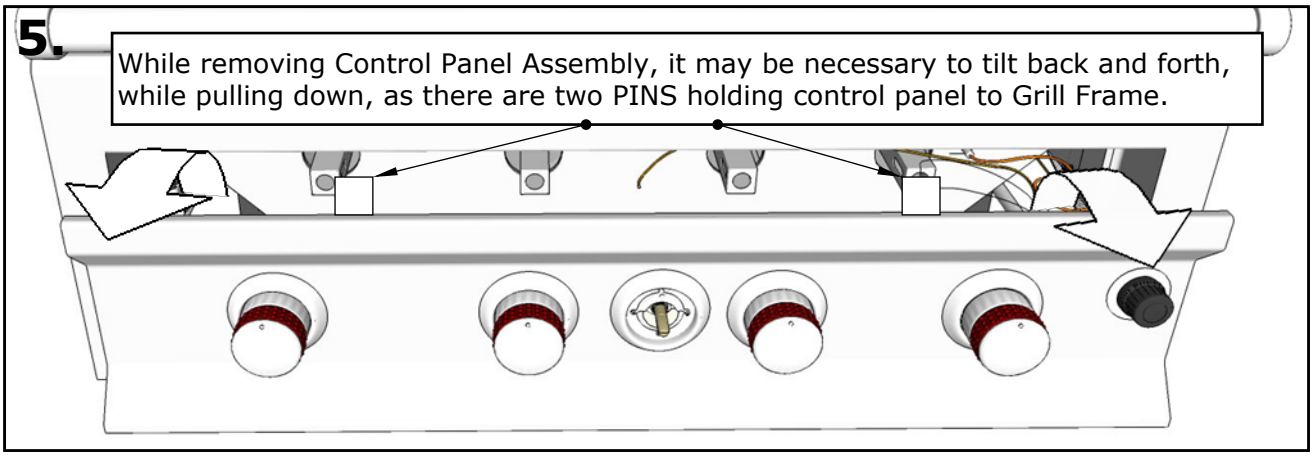

Disasemble Valve Hose and Wires

While pulling out the Control Panel Assembly notice the Flex Hose attached to Center IR-Valve, use Plyers to remove this from Valve Fitting. Also remove the Two Orange Ignition Wires from on top of the Valve. Try to keep the wires on the right valve connected.

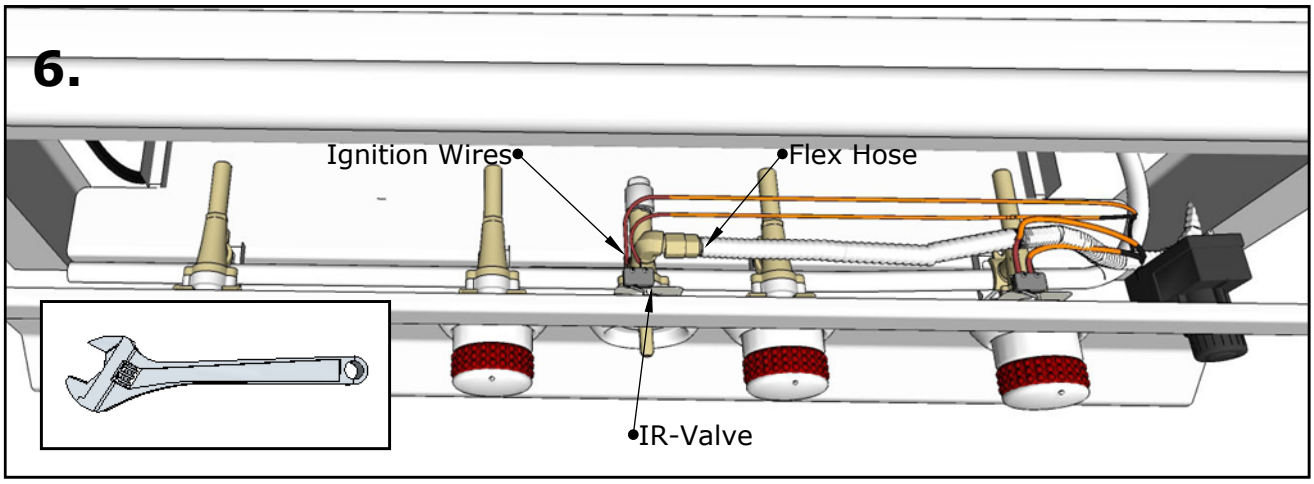

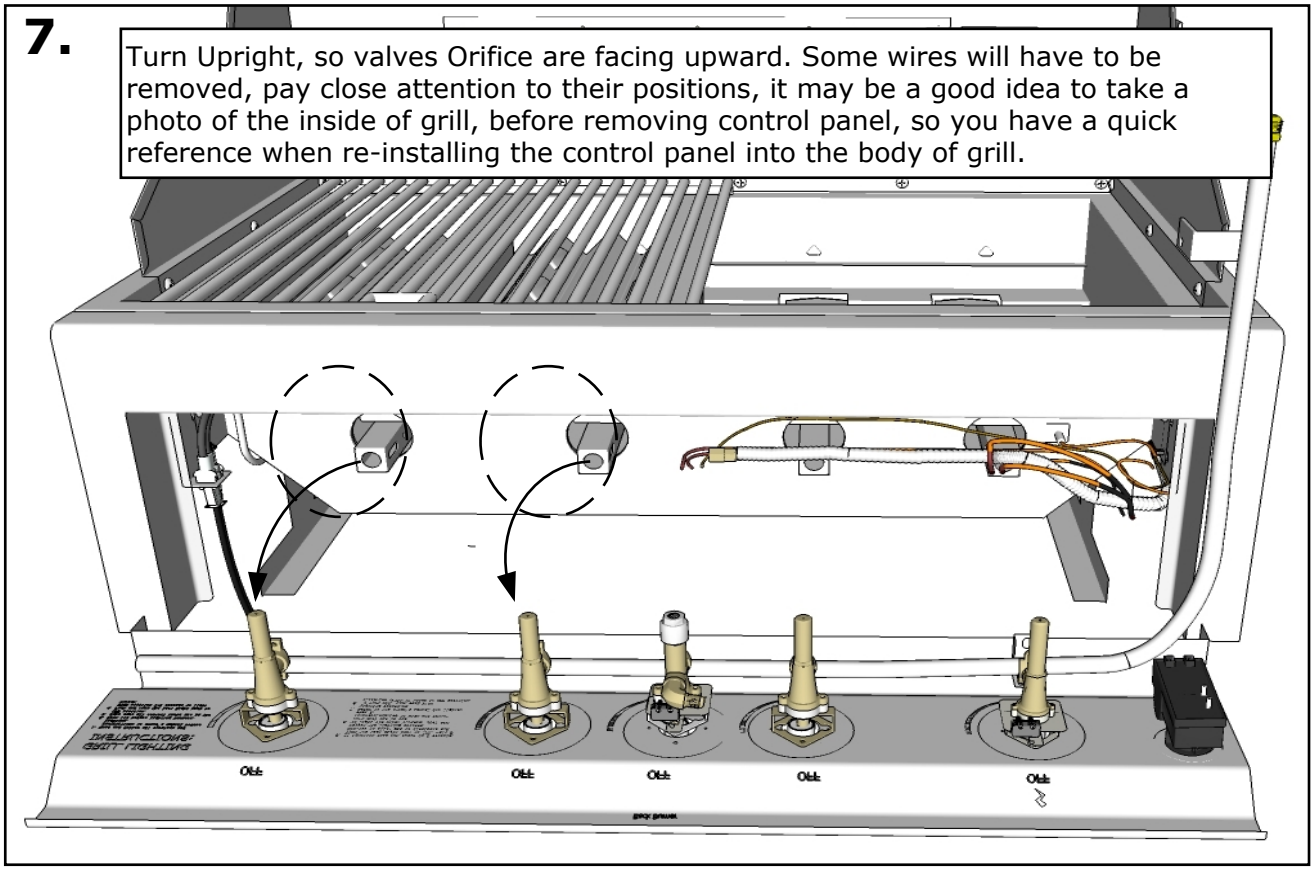

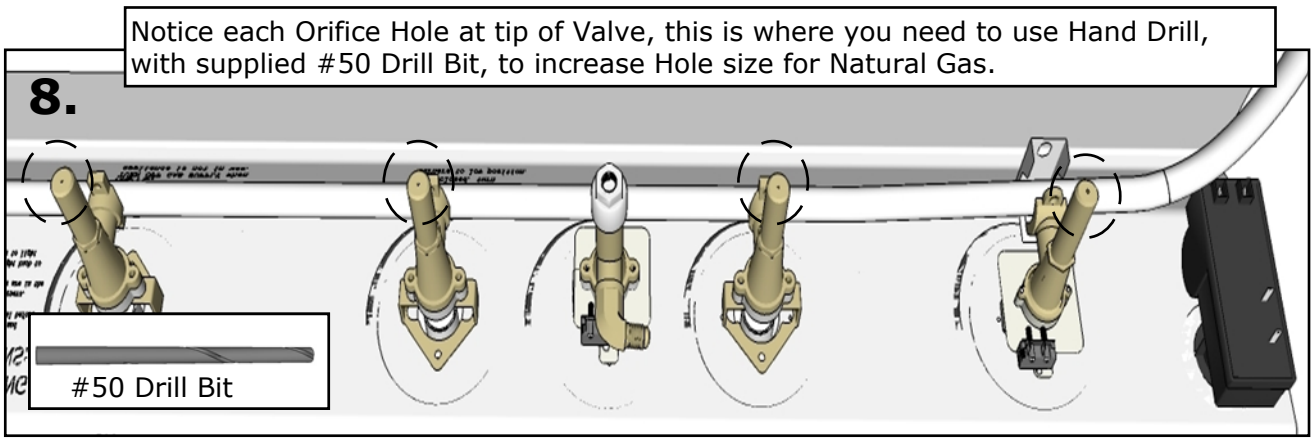

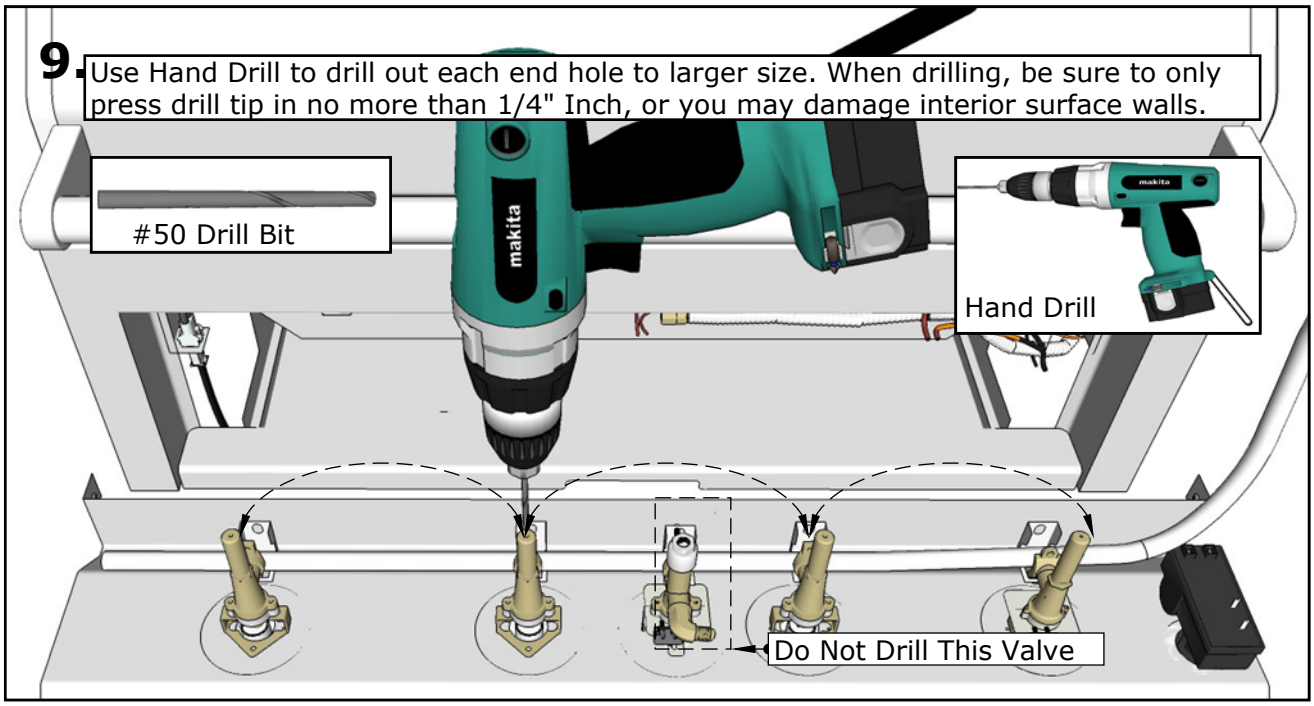
9.
Use Hand Drill to drill out each end hole to larger size. When drilling, be sure to only press drill tip in no more than 1/4" Inch, or you may damage interior surface walls.
#50 Drill Bit
makita
Hand Drill
Do Not Drill This Valve

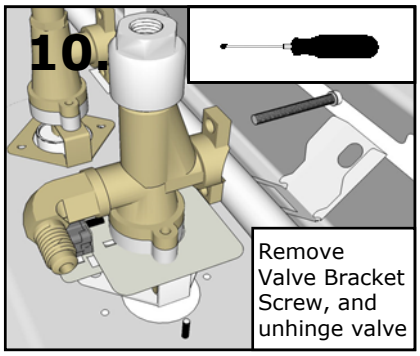
10.
Remove Valve Bracket Screw, and unhinge valve

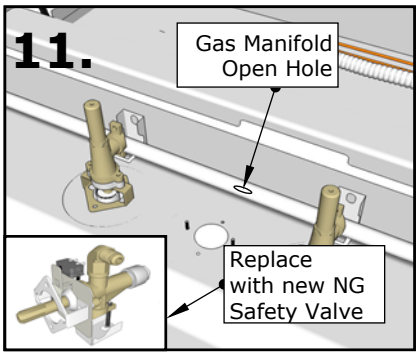
11.
Gas Manifold Open Hole
Replace with new NG Safety Valve

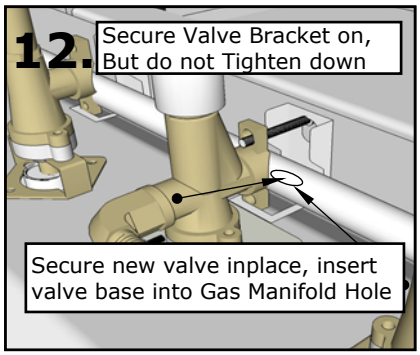
12.
Secure Valve Bracket on, But do not Tighten down
Secure new valve inplace, insert valve base into Gas Manifold Hole

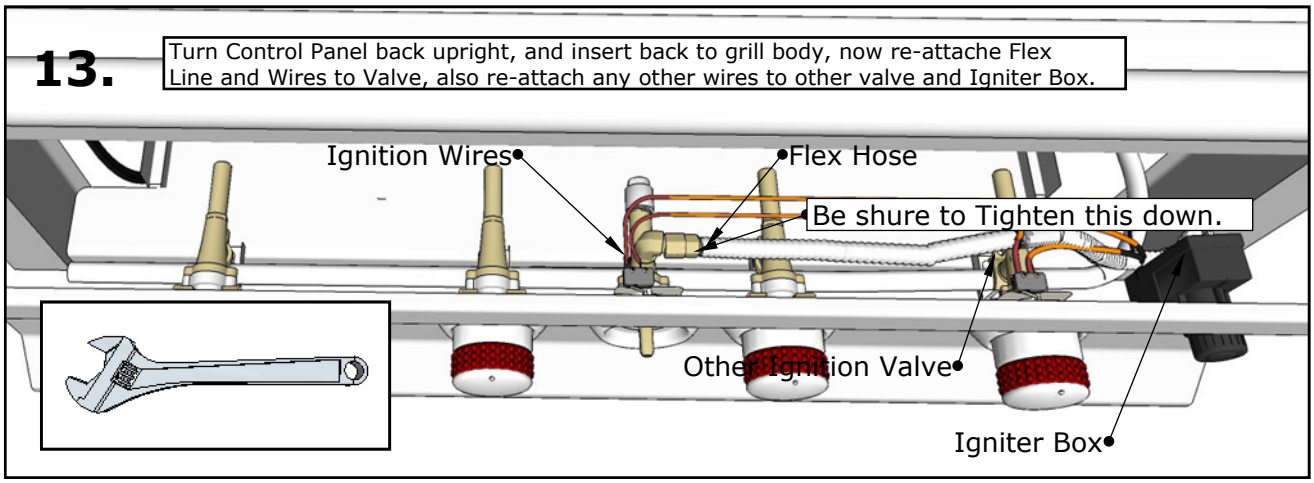
13.
Turn Control Panel back upright, and insert back to grill body, now re-attache Flex Line and Wires to Valve, also re-attach any other wires to other valve and Igniter Box.
Ignition Wires
Flex Hose
Be shure to Tighten this down.
Other Ignition Valve
Igniter Box

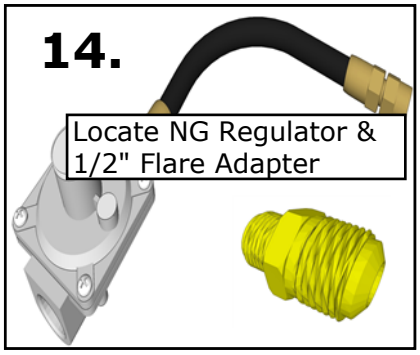
14.
Locate NG Regulator & 1/2" Flare Adapter

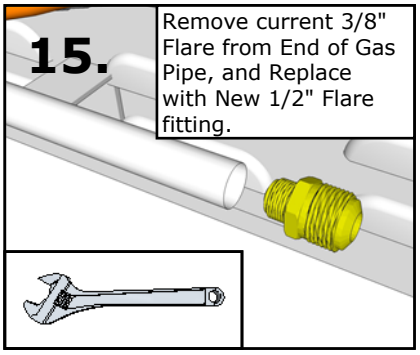
15.
Remove current 3/8" Flare from End of Gas Pipe, and Replace with New 1/2" Flare fitting.

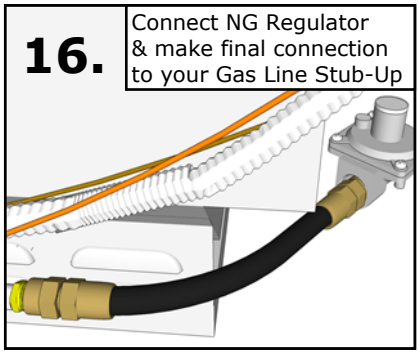
16.
Connect NG Regulator & make final connection to your Gas Line Stub-Up

Test for Gas Leaks

Mix some Soapy Water in a Bowl, use a Sponge to apply solution to these three areas illustrated. Afterward, turn gas flow on, and see if you see any Bubbling, or Smell any Gas, also make sure all Valves are turned OFF. If either is the case, tighten down all connections once more and test again untill there are Zero Gas Smells or Bubbling effects.

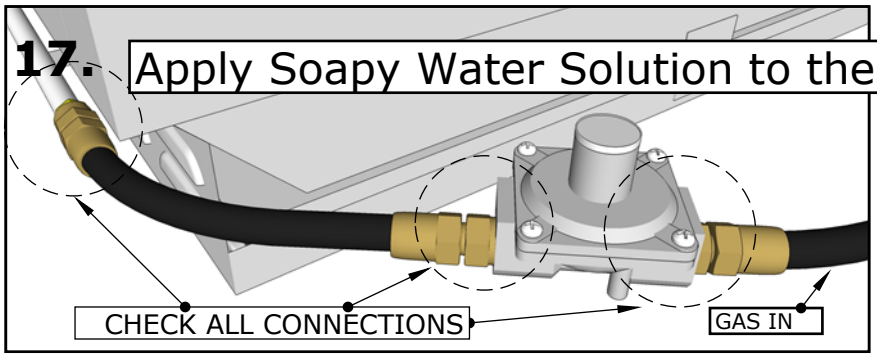

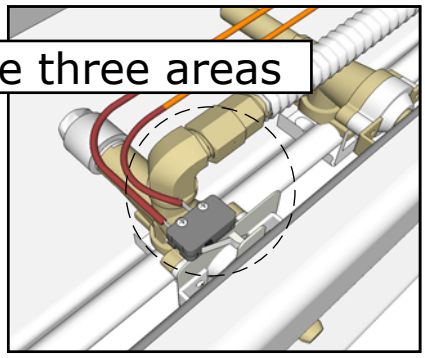

Re-Install Control Panel

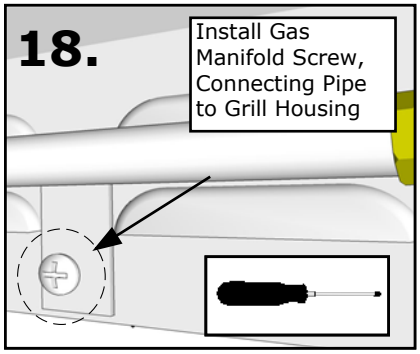

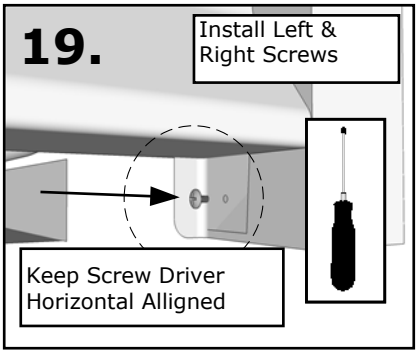

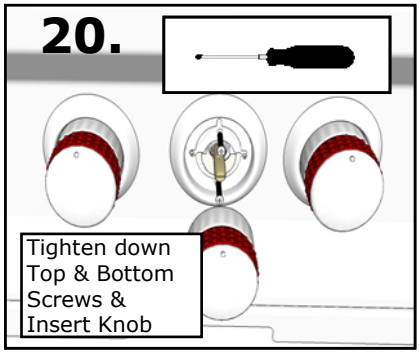

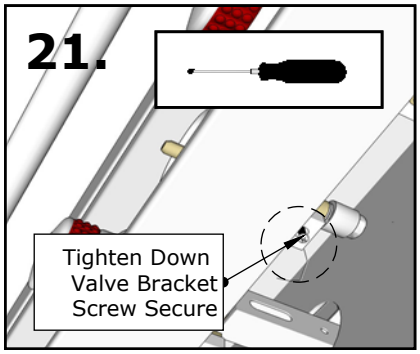

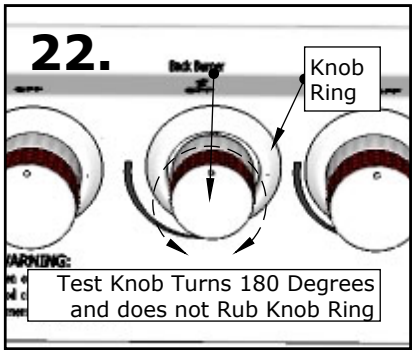

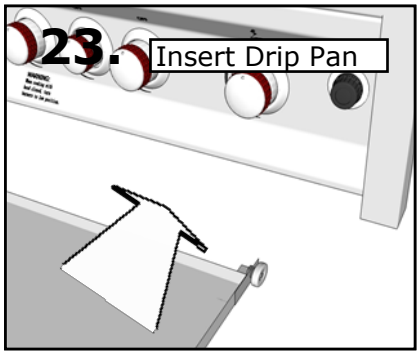

24. Convert Back Infra-Red Burner

Converting the burner is important if you want High Heat cappabilities when using the Rotisserrie, or Searing your meat. If you do not use this burner, and are not concerned if the heat from it is less, it is also not required to convert this burner. The burner will still function and be safe to use, this is to your requirement if you decide to convert this burner from LP to NG gas type.

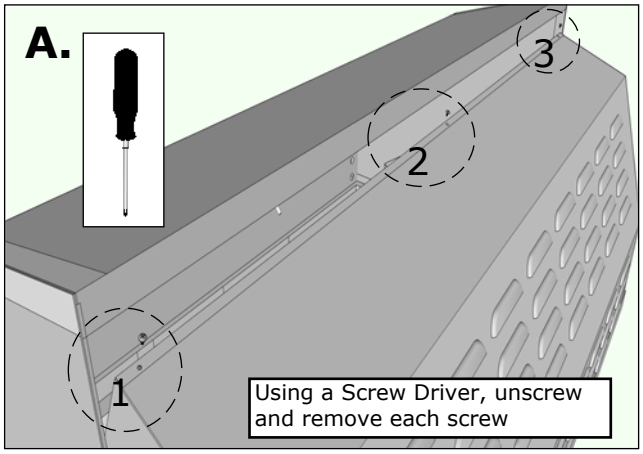

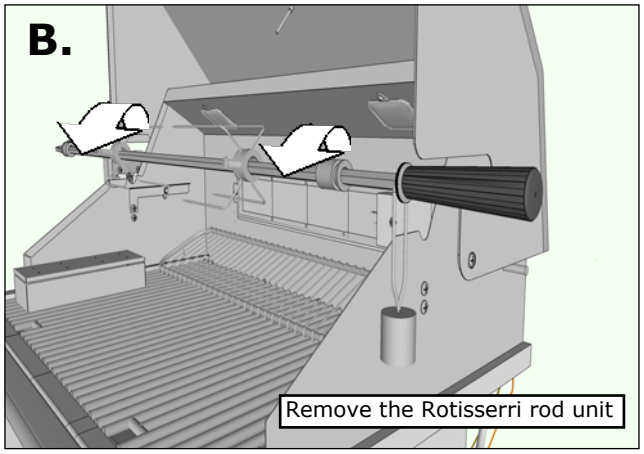

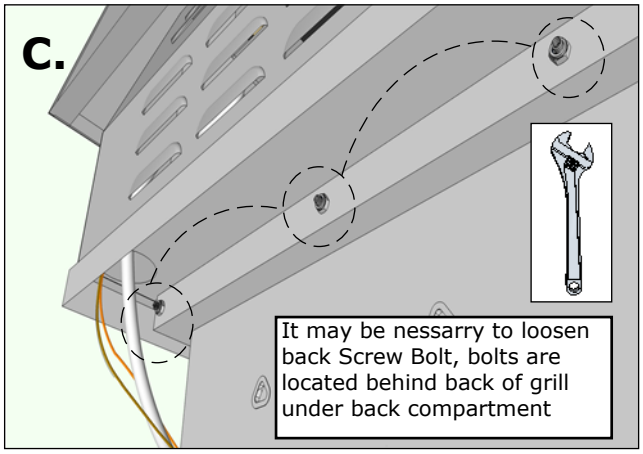

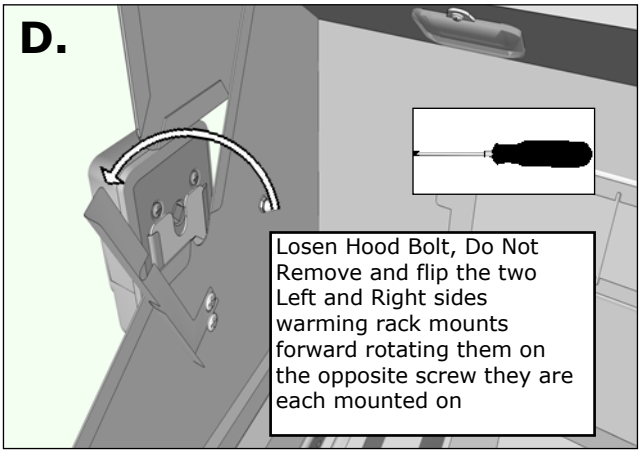

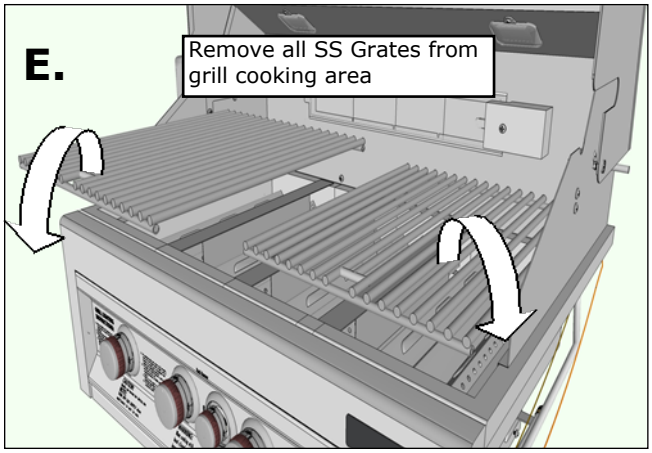

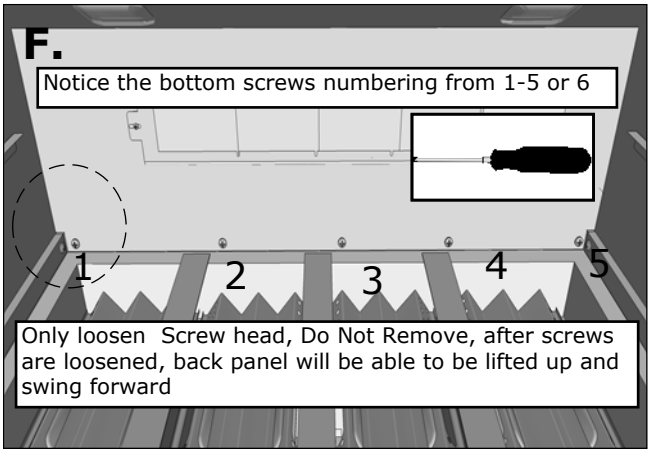

24. Convert Back Infra-Red Burner

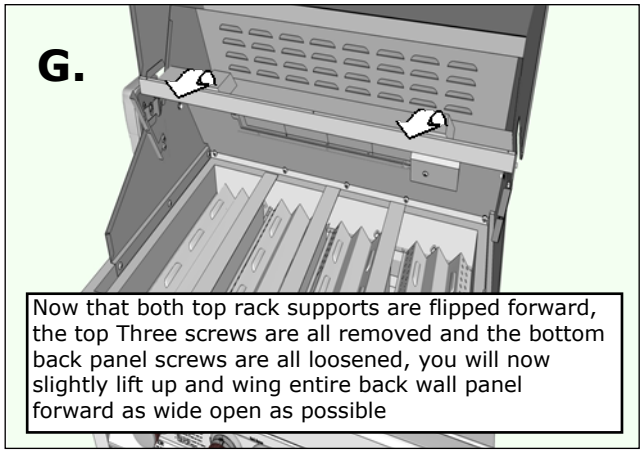

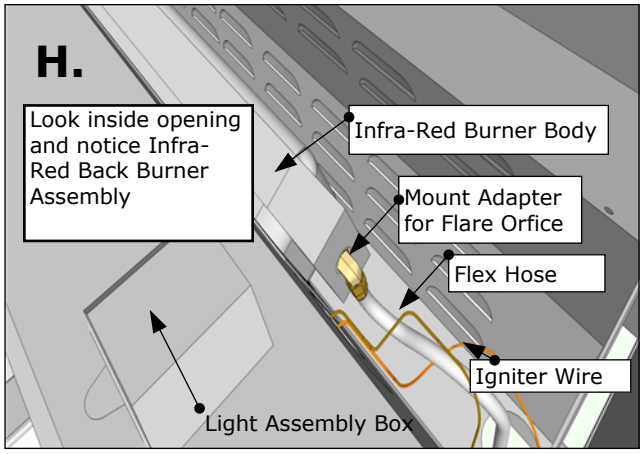

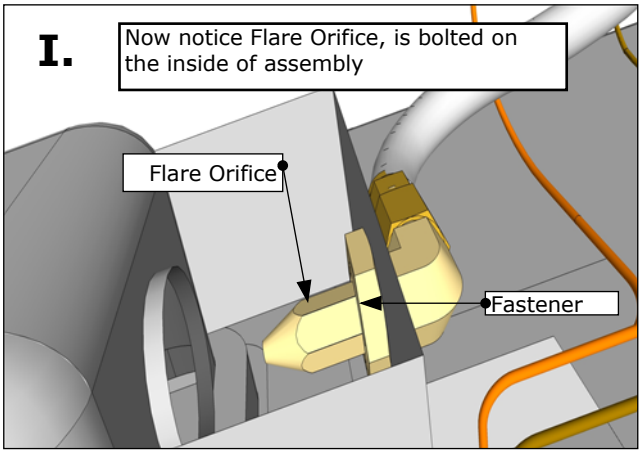

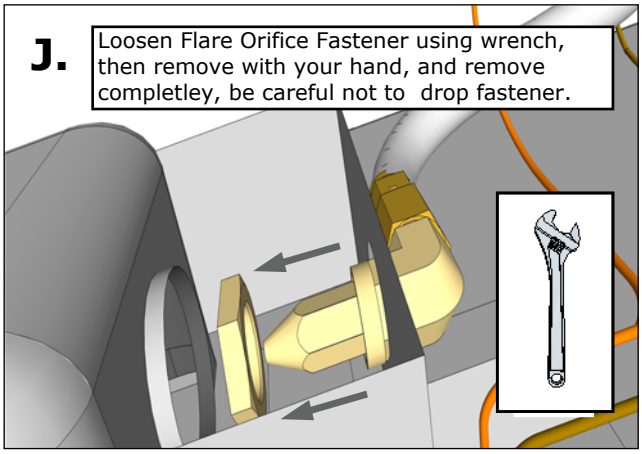

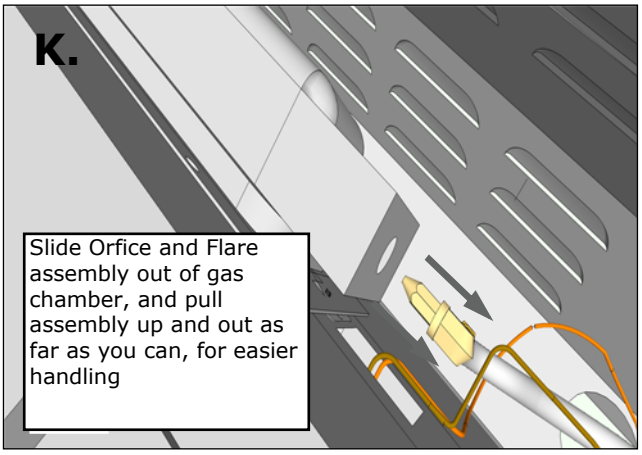

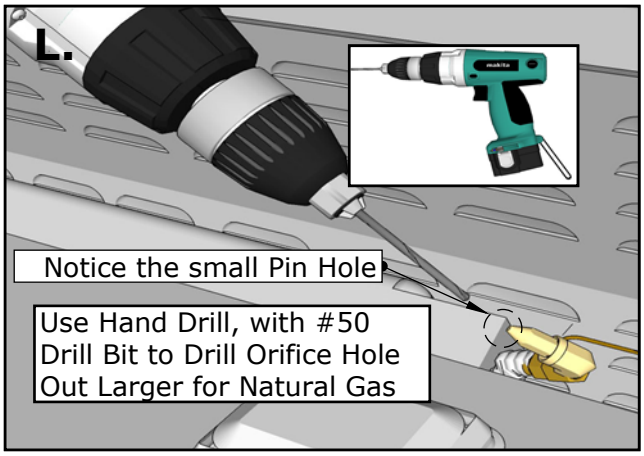

Finish Gas Grill Conversion

Re-Assemble your grill following in the opposite direct section 15 A thru L. Be sure to properly secure any screws and bolts back in blace, some pressure needs to be applied sometimes to insert screws back in. If you have question during this conversion, please contact your local dealer.